1205067 3600 OB))AMB.MORRUM ZX 3600 IVCB-4

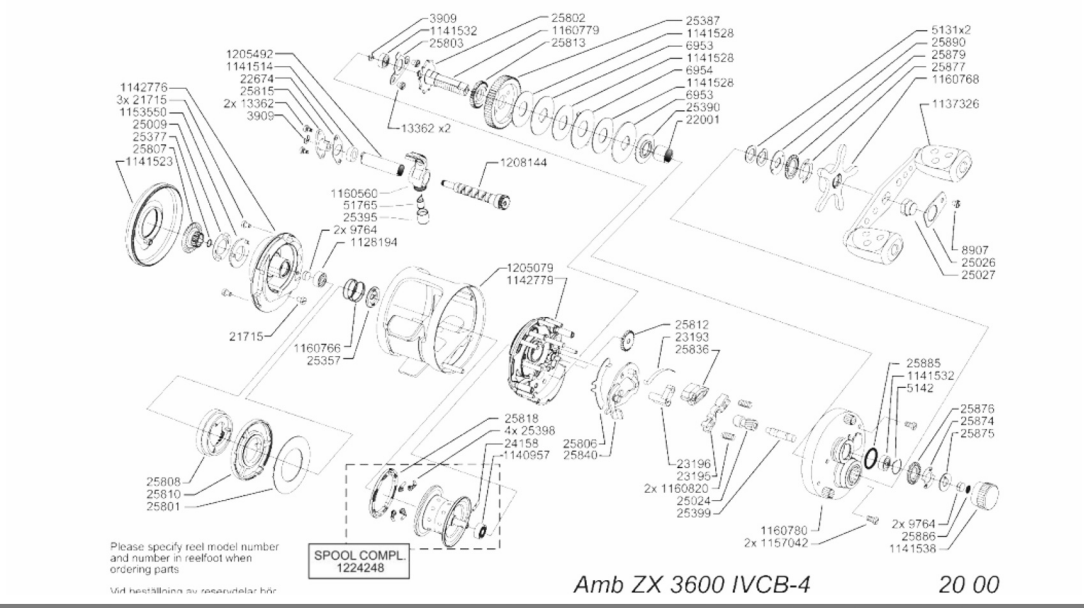

ムサシ オーバーホール作業用資料: リールのメンテは "ムサシ オーバーホール" で検索

	9764	WASHER	¥200
	13362	SCREW	¥200
	21715	SCREW	¥200
	25398	BRAKE WEIGHT ARM	¥300
	25801	BRAKE PLATE	¥600
	25802	DRAIVE GEAR PLATE	¥200
	25803	LOCK WASHER	¥600
	25806	LINK ARM	¥600
	25807	IVCB-DIAL	¥800
	25808	IVCB-CAM	¥800
	25810	BRAKE PLATE HOLDER	¥800
	25812	COG WHEEL	¥200
	25813	COG WHEEL	¥200
	25815	LOCKER BUSHING	¥300
	25818	BRAKE WEIGHT HOLDER	¥300
	25836	SPRING HOLDER	¥600
	25840	LIFT PLATE	¥1,200
	25874	BRAKE CLICK SPRING	¥500
	25875	BRAKE CLICK RATCHET	¥500
	25876	BRAKE CLICK RATCHET	¥200
	25877	DRAG CLICK SPRING	¥500
	25879	DRAG CLICK RATCHET	¥200
	25885	O-RING	¥200
	25886	CAP WASHER	¥200
	25890	RATCHET HOLDER	¥500
	51765	PILOT GUIDE	¥600
	1128194	BALLBEARING	¥800
	1137326	HANDLE	¥3,000
	1140957	BALL BEARING	¥3,000
	1141514	BALLBEARING	¥1,200
	1141523	OUTER SIDE PLATE RIGHT	¥8,000
	1141528	BRAKEWASHER	¥600
	1141532	BALLBEARING	¥1,200
	1141538	SPOOL CONTROL CAP	¥1,500
	1142776	INNER SIDEPLATE LEFT	¥2,000
	1142779	INNER SIDEPLATE RIGHT	¥2,000
	1153550	CLICKPLATE	¥800
	1157042	SCREW	¥200
	1160560	LINE CARRIAGE	¥2,000
	1160766	SPRING	¥200
	1160768	STAR WHEEL	¥2,000
	1160779	MAIN GEAR BUSHING	¥2,000
	1160780	OUTER SIDE PLATE	¥8,600
	1160820	SPRING	¥200
	1205079	FRAME	¥16,000
	1205492	LEVELWIND TUBE	¥1,500
	1208144	WORM SHAFT COMPLETE	¥4,000
	1224248	SPOOL	¥8,700