1156990 1600 OB))AMB.MORRUM ZX 1601BJ IVCB-4

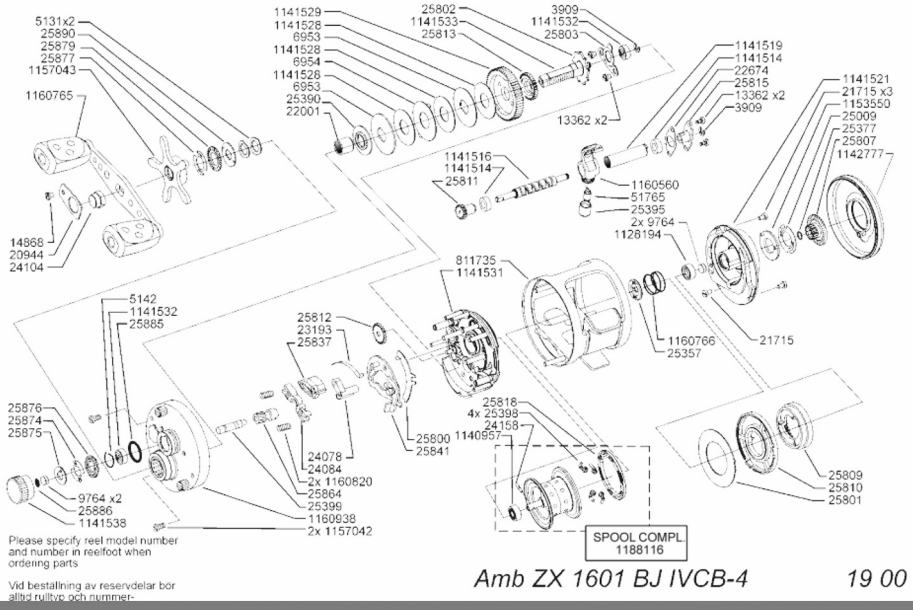

ムサシ オーバーホール作業用資料: リールのメンテは "ムサシ オーバーホール" で検索

	3909	RETAINER	￥200
	5131	SPRING WASHER	￥200
	5142	RETAINER	￥200
	6953	FRICTION WASHER	￥200
	6954	FRICTION WASHER	￥200
	9764	WASHER	￥200
	13362	SCREW	￥200
	14868	SCREW	￥200
	20944	NUT COVER	￥600
	21715	SCREW	￥200
	21715	SCREW	￥200
	22001	HANDLE BUSHING	￥1,200
	22674	LOCKING PLATE	￥300
	23193	SPRING	￥200
	24078	PIN HOLDER	￥600
	24084	YOKE	￥600
	24104	HANDLE NUT	￥600
	24158	PIN	￥200
	25009	BRAKE CLICK SPRING	￥500
	25357	BALL BEARING PLUG	￥200
	25377	O-RING	￥200
	25390	PLATE	￥600
	25395	NUT	￥500
	25398	BRAKE WEIGHT ARM	￥300
	25399	PINION SHAFT	￥1,500
	25800	LINK ARM	￥600
	25801	BRAKE PLATE	￥600
	25802	DRAIVE GEAR PLATE	￥200
	25803	LOCK WASHER	￥600
	25807	IVCB-DIAL	￥800
	25809	IVCB-CAM	￥800
	25810	BRAKE PLATE HOLDER	￥800
	25811	COG WHEEL	￥200
	25812	COG WHEEL	￥200
	25813	COG WHEEL	￥200
	25815	LOCKER BUSHING	￥300
	25818	BRAKE WEIGHT HOLDER	￥300
	25837	SPRING HOLDER	￥600
	25841	LIFT PLATE	￥1,200
	25864	PINION GEAR	￥2,900
	25874	BRAKE CLICK SPRING	￥500
	25875	BRAKE CLICK RATCHET	￥500
	25876	BRAKE CLICK RATCHET	￥200
	25877	DRAG CLICK SPRING	￥500
	25879	DRAG CLICK RATCHET	￥200
	25885	O-RING	￥200
	25886	CAP WASHER	￥200
	25890	RATCHET HOLDER	￥500
	51765	PILOT GUIDE	￥600
	811735	FRAME	￥15,000

	1128194	BALLBEARING	￥800
	1140957	BALL BEARING	￥3,000
	1141514	BALLBEARING	￥1,200
	1141516	WORM SHAFT	￥2,500
	1141519	TUBE WORMSHAFT	￥1,500
	1141521	INNERPLATE RIGHT	￥2,000
	1141528	BRAKEWASHER	￥600
	1141529	MAIN GEAR	￥4,000
	1141531	INNERPLATE LEFT	￥2,000
	1141532	BALLBEARING	￥1,200
	1141533	MAIN GEARBUSHING	￥2,000
	1141538	SPOOL CONTROL CAP	￥1,500
	1142777	OUTERSIDE PLATE LEFT	￥8,000
	1153550	CLICKPLATE	￥800
	1157042	SCREW	￥200
	1157043	STAR WHEEL	￥2,000
	1160560	LINE CARRIAGE	￥2,000
	1160765	HANDLE	￥3,000
	1160766	SPRING	￥200
	1160820	SPRING	￥200
	1160938	SIDEPLATE LEFT	￥8,600
	1188116	SPOOL	￥8,700