1294131 1600 OB))AMB.MORRUM ZX1601 MAG

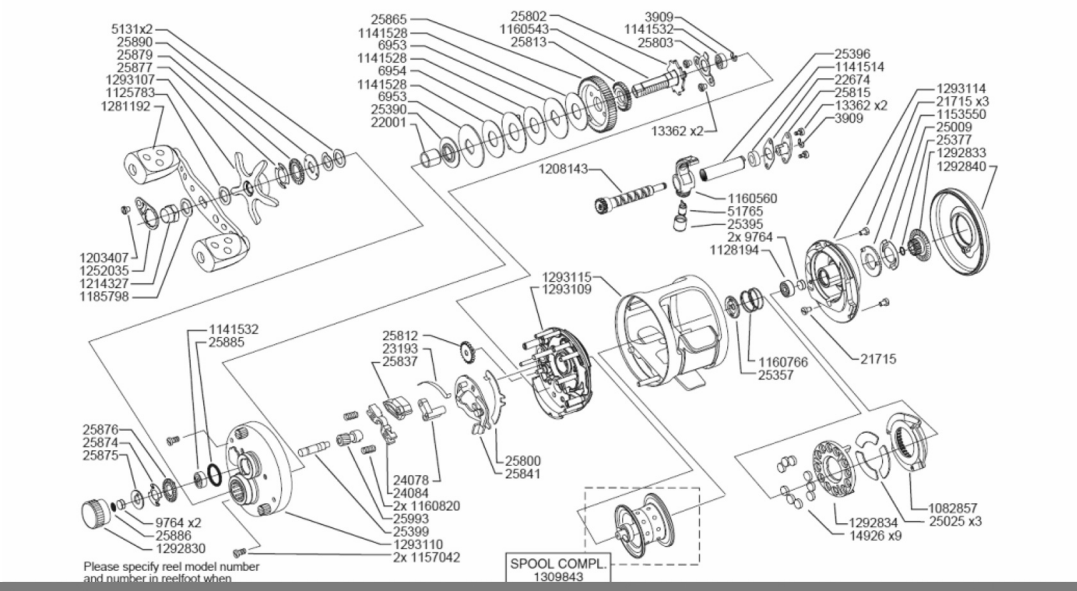

ムサシ オーバーホール作業用資料: リールのメンテは "ムサシ オーバーホール" で検索

	パーツID	パーツ名	価格
	3909	RETAINER	￥200
	5131	SPRING WASHER	￥200
	6953	FRICTION WASHER	￥200
	6954	FRICTION WASHER	￥200
	9764	WASHER	￥200
	13362	SCREW	￥200
	14926	MAGNET	￥200
	21715	SCREW	￥200
	22001	HANDLE BUSHING	￥1,200
	22674	LOCKING PLATE	￥300
	23193	SPRING	￥200
	24078	PIN HOLDER	￥600
	24084	YOKE	￥600
	25009	BRAKE CLICK SPRING	￥500
	25025	MAGNET PLATE	￥200
	25357	BALL BEARING PLUG	￥200
	25377	O-RING	￥200
	25390	PLATE	￥600
	25395	NUT	￥500
	25396	WORM SHAFT COVER	￥1,500
	25399	PINION SHAFT	￥1,500
	25800	LINK ARM	￥600
	25802	DRAIVE GEAR PLATE	￥200
	25803	LOCK WASHER	￥600
	25812	COG WHEEL	￥200
	25813	COG WHEEL	￥200
	25815	LOCKER BUSHING	￥300
	25837	SPRING HOLDER	￥600
	25841	LIFT PLATE	￥1,200
	25865	DRAIVE GEAR	￥4,000
	25874	BRAKE CLICK SPRING	￥500
	25875	BRAKE CLICK RATCHET	￥500
	25876	BRAKE CLICK RATCHET	￥200
	25877	DRAG CLICK SPRING	￥500
	25879	DRAG CLICK RATCHET	￥200
	25885	O-RING	￥200
	25886	CAP WASHER	￥200
	25890	RATCHET HOLDER	￥500
	25993	PINION GEAR	￥2,900
	51765	PILOT GUIDE	￥600
	1082857	MAG CAM	￥800
	1125783	WASHER	￥50
	1128194	BALLBEARING	￥800
	1141514	BALLBEARING	￥1,200
	1141528	BRAKEWASHER	￥600
	1141532	BALLBEARING	￥1,200
	1153550	CLICKPLATE	￥800
	1157042	SCREW	￥200
	1160543	MAIN GEAR BUSHING	￥2,000
	1160560	LINE CARRIAGE	￥2,000

	パーツID	パーツ名	価格
	1160766	SPRING	￥200
	1160820	SPRING	￥200
	1185798	HANDLE WASHER	￥50
	1203407	SCREW	￥50
	1208143	WORM SHAFT COMP	￥4,000
	1214327	HANDLE NUT	￥200
	1252035	HANDLE NUT COVER	￥300
	1281192	HANDLE	￥10,000
	1292830	SPOOL CONTROL CAP	￥1,500
	1292833	MAG DIAL	￥800
	1292834	MAG HOLDER	￥1,000
	1292840	OUTER SIDEPLATE B	￥4,200
	1293107	STAR WHEEL	￥2,000
	1293109	INNER SIDEPLATE LEFT	￥3,500
	1293110	OUTER SIDEPLATE A	￥8,600
	1293114	INNER SIDEPLATE RIGHT	￥3,000
	1293115	FRAME	￥12,000
	1309843	SPOOL COMP	￥6,000